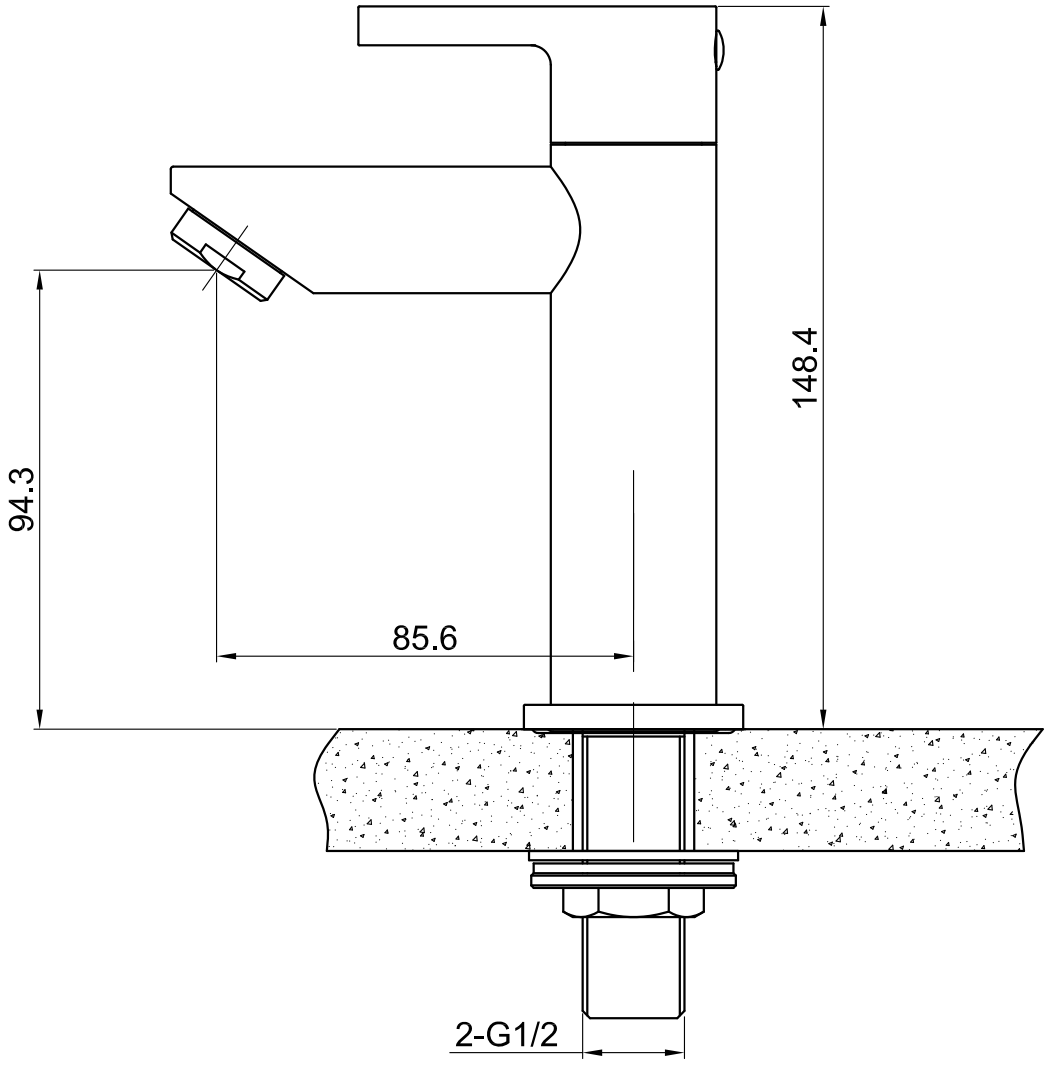
148.4
94.3
85.6
2-G1/2

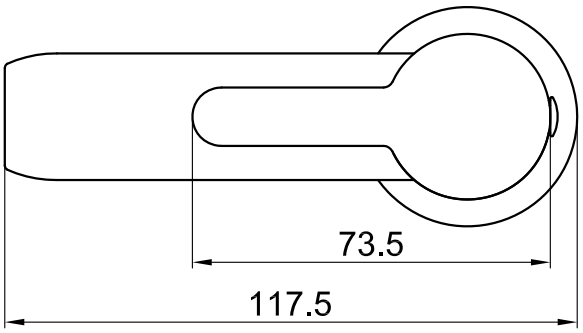
73.5
117.5